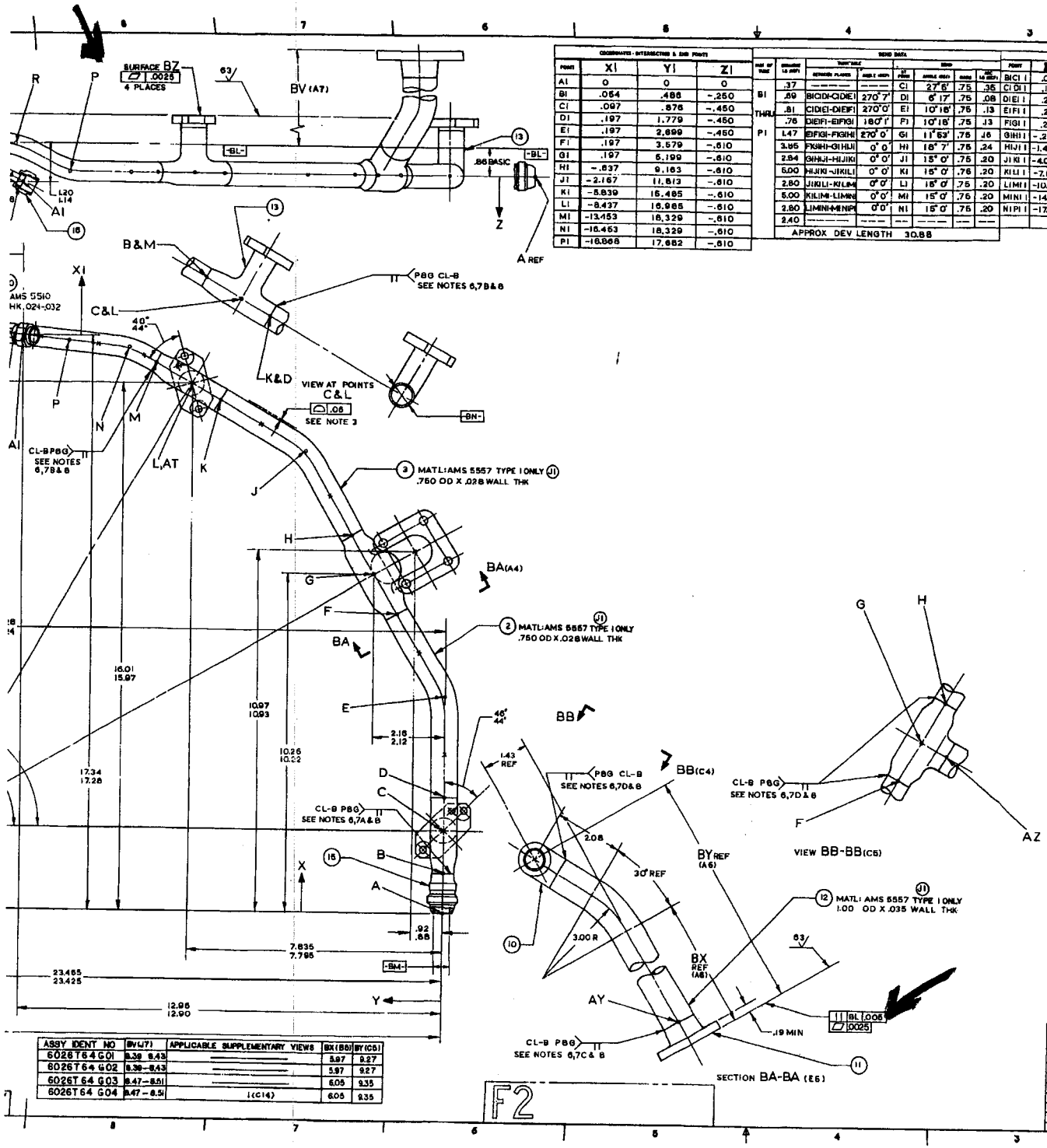

ASSY IDENT NO	BV(A7)	APPLICABLE SUPPLEMENTARY VIEWS	BX(B6)	BY(C6)
6026T64 G01	8.39 - 8.43	———	5.97	9.27
6026T64 G02	8.39 - 8.43	———	5.97	9.27
6026T64 G03	8.47 - 8.51	———	6.05	9.35
6026T64 G04	8.47 - 8.51	1(C14)	6.05	9.35

POINT	XI	YI	ZI
AI	0	0	0
BI	.054	.488	-.250
CI	.097	.876	-.450
DI	.197	1.779	-.450
EI	.197	2.699	-.450
FI	.197	3.579	-.610
GI	.197	5.199	-.610
HI	-.637	9.163	-.610
JI	-2.167	11.813	-.610
KI	-5.839	15.485	-.610
LI	-8.437	16.985	-.610
MI	-13.453	18.329	-.610
NI	-16.463	18.329	-.610
PI	-16.868	17.662	-.610

BEND DATA

PART OF TUBE	DEVELOPED LG (INCH)	TOOL TABLE: BETWEEN PLACES	TOOL TABLE: ANGLE (DEG)	BEND: AT POINT	BEND: ANGLE (DEG)	BEND: RADIUS	BEND: LEG (INCH)
BI THRU PI	.37	———	———	CI	27°6'	.75	.35
	.69	BICIDI-CIDIEI	270°7'	DI	6°17'	.75	.08
	.81	CIDIEI-DIEIFI	270°0'	EI	10°18'	.75	.13
	.76	DIEIFI-EIFIGI	180°1'	FI	10°18'	.75	.13
	1.47	EIFIGI-FIGIHI	270°0'	GI	11°53'	.75	.16
	3.95	FIGIHI-GIHIJI	0°0'	HI	15°7'	.75	.24
	2.84	GIHIJI-HIJIKI	0°0'	JI	15°0'	.75	.20
	6.00	HIJIKI-JIKILI	0°0'	KI	15°0'	.76	.20
	2.80	JIKILI-KILIMI	0°0'	LI	15°0'	.75	.20
	5.00	KILIMI-LIMINI	0°0'	MI	15°0'	.75	.20
	2.80	LIMINI-MINIPI	0°0'	NI	15°0'	.75	.20
	2.40	———	———	———	———	———	———
	APPROX DEV LENGTH 30.88						

INSPECTION DATA & COORDINATES

POINT	XI	YI	ZI	TANG ANGLE	BASE ANGLE
BICI I	.06	.56	-.29	27° 3'	83°40'
CIDI I	.15	1.40	-.45	0° 0'	83°43'
DIEI I	.20	2.23	-.45	0° 0'	90° 0'
EIFI I	.20	3.14	-.53	10°18'	90° 0'
FIGI I	.20	4.36	-.61	0° 0'	90° 0'
GIHI I	-.22	7.16	-.61	0° 0'	101°53'
HIJI I	-1.41	10.50	-.61	0° 0'	120° 0'
JIKI I	-4.00	13.65	-.61	0° 0'	136° 0'
KILI I	-7.14	16.24	-.61	0° 0'	150° 0'
LIMI I	-10.94	17.66	-.61	0° 0'	165° 0'
MINI I	-14.95	18.33	-.61	0° 0'	180° 0'
NIPI I	-17.71	17.99	-.61	0° 0'	195° 0'

REVISIONS

ZONE	LTR	DESCRIPTION	DATE	APPROVED
	J	REV RECORD CONSOLIDATED, PERM RECORD REPRODUCIBLE FILED (1) TYPE I ONLY ADDED ZONES B4, D5, E6, E9, E12, E13 & B12 CID 629436	83-11-16	CA
D8	K	(1) DELETED (2) NOTE 14 REVISED CID 629437	84-3-28	CA
	L	(1) GENL CHG ZONES A4, A8, D14, E13, E14, F13, J7 CID 631884	84-11-13	CA
D13	M	(1) WAS "... IDENT NO, SERIAL NO, MFR IDENT, AND THE WORD "FUEL" " CID 632613	84-12-18	CA
	N	(1) GENL CHG ZONES A8, B3, B12, C4, C5, D3, D5, E3, E11, E13, H7 CID 633082	85-02-15	CA

14 APPLY (ITEM 21 (WEAR STRIP) (D15) PER P1TF6 CL-A EXCEPT VENDOR TECHNICAL PLAN PER P1TF4 IS NOT REQUIRED

11 A) IN FREE STATE SURFACE BZ (J8) (4 PLACES) SHALL LIE WITHIN ± .015 OF DATUM CA (J8)
B) WITH SURFACES BZ (4 PLACES) RESTRAINED TO DATUM CA WITHIN .005 TOTAL AND POINTS A (B7) & AR (B11) RESTRAINED TO DRAWING REQUIREMENTS, ALL DIMENSIONS SHALL BE MET

15 DATUM CA (J8) IS A PLANE ESTABLISHED BY SURFACES BZ (J8.)

~~14 APPLY ITEM 21 (D14) (WEAR SLEEVE) PER P1TF6 CL-A EXCEPT VENDOR PROCESS SPECIFICATION PER MIL-A-8867 IS NOT REQUIRED~~ RELOCATED ZONE H3

θ 8 100 PERCENT PENETRATION REQUIRED FOR BUTT WELD JOINTS

13 ALLOW .001-.003 CLEARANCE ON RADIUS FOR BRAZING

12 CL-B MATERIAL RELEASE (SEE P1TF3) FOR ITEMS 2, 3, 4, 5, 6, 12, 18 & 20

~~11 ALL DIMENSIONS IN THIS SECTION APPLY WITH THE ASSEMBLY RESTRAINED AS MACHINED~~

10 MUST CONFORM TO P1TF3 CL-B WITH THE FOLLOWING EXCEPTIONS:
A) VISUAL EVIDENCE OF BRAZE AROUND 70 PERCENT OF THE PERIPHERY OF EACH BRAZE JOINT OF ITEMS 18 AND 20 CONSTITUTES AN ACCEPTABLE BRAZE
B) FILLER MATERIAL MAY BE PLACED ONLY AT INSIDE OF JOINT P (B10) VISUALLY INSPECT FOR FILLER MATERIAL 100 PERCENT AROUND OPPOSITE SIDE OF JOINT AFTER BRAZING TO ASSURE ADEQUATE BRAZE FLOW. MEETING THESE REQUIREMENTS CONSTITUTES AN ACCEPTABLE BRAZE JOINT

9 DATUM BL (J12) IS A PLANE ESTABLISHED BY DATUMS BM (A13, B6) AND DATUM BN (F6)

~~8 RADIOGRAPHIC INSPECTION WELDS PER P1TF6 CL-A ONLY TO VERIFY 100 PERCENT PENETRATION~~ RELOCATED (F3)

7 MUST CONFORM TO P1TF3 CL-B WITH THE FOLLOWING EXCEPTIONS:
A) WELD JOINTS E (F9) & AP (B10)
1) REINFORCEMENT .000-.028
2) INSPECTION FOR OFFSET NOT REQUIRED
B) WELD JOINTS D (C9), K (E8), M (F8), AA (F9), AC (B11), AK (C12) & AM (C10)
REINFORCEMENT .000-.028
C) WELD JOINT AY (A5)
1) REINFORCEMENT .000-.035
2) INSPECTION FOR OFFSET NOT REQUIRED
D) WELD JOINTS F (D7), H (E7) & AZ (C3)
REINFORCEMENT .000-.035

6 P86 FILLER MATERIAL: AMS 5680
P9 FILLER MATERIAL: AMS 4772 P9 FLUX AMS 3411

5 PRIOR TO ATTACHING ITEM 21 (WEAR SLEEVE) FLUORESCENT PENETRANT INSP PER P1TF6 CL-D WITH THE FOLLOWING ACCEPTABILITY LIMITS:
A) PARENT MATERIAL
1) ALL INDICATIONS LESS THAN .02 ARE ACCEPTABLE
2) ALL INDICATIONS, EXCEPT CRACKS, BETWEEN .02 & .04 ARE ACCEPTABLE PROVIDED THEY ARE NOT CLOSER THAN .12
B) WELDED JOINTS
1) ALL INDICATIONS LESS THAN .03 ARE ACCEPTABLE
2) ALL INDICATIONS, EXCEPT CRACKS, BETWEEN .03 & .06 ARE ACCEPTABLE PROVIDED THEY ARE NOT CLOSER THAN .12
C) BRAZED JOINTS
1) ALL INDICATIONS LESS THAN .03 ARE ACCEPTABLE
2) ALL INDICATIONS, EXCEPT CRACKS, BETWEEN .03 & .05 ARE ACCEPTABLE

4 PRIOR TO FLUORESCENT PENETRANT INSPECTION HYDRAULIC PRESSURE TEST PER AMS 2615. NO LEAKS ALLOWED WHEN TESTED AT 1200 PSIG FOR NOT LESS THAN 1 MINUTE

3 THIS TOLERANCE (ZONE F7) APPLIES TO ALL POINTS ON THE MAXIMUM EXTERNAL SURFACES OF ITEMS 2, 3, 4, 5, 6, 7 & 12 EXCEPT END POINTS

2 VENDOR SUBSTANTIATION REQUIRED

1 MUST CONFORM TO:
P1TF3 CL-A (INTERPRETATION OF DRAWING)
P1TF1 CL-A (FORMED TUBING)
P1TF5 (IDENTIFICATION MARKING) SEE ZONE D3
P1TF6 CL-A (SHEET METAL PARTS)

DATUM	ZONE
BL	J12
BM	A13-B6
BN	F6
CA	J9

UNLESS OTHERWISE SPECIFIED DIMENSIONS ARE IN INCHES
ALL DIMENSIONS AS NOTED
MIN AS NOTED
FOR G.T. USE ONLY
RASTER DRAWING NO
1/8 17A128-931
1/4 42-55000

TYPE INSEPARABLE ASSY | SEE SEPARATE PARTS LIST

SIGNATURES / DATE
DRAWN 6-18-76
CHECKED 7-1-76
ENGR 7-1-76
ENGR 7-1-76
ENGR 7-1-76
ENGR 7-7-76

GENERAL ELECTRIC
AIRCRAFT ENGINE GROUP, LYNN, MASSACHUSETTS, U.S.A.

MANIFOLD, MAIN FUEL-AFTERBURNER-R H

J | 99207 | 6026T64

SCALE | WT EST. | SHEET

6026T64 N

6026T64 N

Distribution Statement Code: D Export Controlled

R0007-95-C-0007

COORDINATES - INTERSECTIONS & END POINTS			
POINT	X	Y	Z
A	0	0	0
B	1.200	0	0
C	2.450	0	0
D	3.450	0	0
E	6.831	0	0
F	9.043	1.450	0
G	10.236	2.140	0
H	11.433	2.830	0
J	13.916	4.281	0
K	15.486	5.948	0
L	15.986	7.815	0
M	16.596	8.871	0
N	17.046	9.660	0
P	17.247	11.469	0
R	17.431	13.170	-.86
S	17.555	14.302	-.86
T	17.600	14.710	-.86
U	17.600	18.130	-.86
V	16.933	21.301	-.86
W	16.766	22.094	-.86
AA	16.486	22.578	-.86
AB	15.986	23.445	-.86
AC	15.486	24.312	-.86
AD	15.236	24.744	-.86
AE	12.094	27.886	-.86
AF	11.564	28.416	-.86
AG	8.966	29.916	-.86
AH	4.674	31.066	-.86
AJ	3.950	31.260	-.86
AK	3.450	31.260	-.86
AL	2.450	31.260	-.86
AM	1.450	31.260	-.86
AN	.950	31.260	-.86
AP	-.993	30.739	-.86
AR	-2.848	30.242	-.86

SEND DATA									
SEG OF TUBE	TRANSOM LB (REF)	TANGENTS: OUTBOARD FLANGE	TANGENTS: ANGLE (REF)	SEND: POINT	SEND: ANGLE (REF)	SEND: RADIUS	SEND: TOL. LB (REF)
D THRU F	2.46	———	———	E	30° 0'	2.26	1.18
	2.30	———	———	——	0° 0'	0	0
H THRU K	2.30	———	———	J	30° 0'	2.26	1.18
	2.48	———	———	——	0° 0'	0	0
M THRU AA	.61	———	0° 0'	N	23° 46'	1.88	.78
	1.01	MNP-NPR	270° 0'	P	26° 58'	1.88	.88
	1.00	NPR-PRT	180° 0'	R	26° 58'	1.88	.88
	——	———	———	——	0° 0'	0	0
	1.00	———	———	T	6° 15'	1.88	.20
	3.12	PRT-RTU	0° 0'	U	11° 53'	1.88	.39
	——	———	———	——	———	——	——
	3.56	RTU-TUW	0° 0'	W	18° 8'	1.88	.59
	.26	TUW-UWAA	———	——	0° 2'	0	0
AC THRU AK	.25	———	———	AD	14° 59'	1.88	.49
	——	———	———	——	———	——	——
	4.70	~~AC&AF-ADAFAG~~	0° 0'	AF	16° 0'	1.88	.49
	2.51	~~ADAFAG-AGAHAJ~~	0° 0'	——	———	——	——
	——	———	———	——	———	——	——
	4.70	~~AFAGAJ-AGAJAK~~	0° 0'	AG	16° 0'	1.88	.49
	.25	———	———	AJ	15° 0'	1.88	.49
AM THRU AP	——	———	———	——	———	——	——
	.25	———	———	AN	16° 1'	1.88	.49
	1.75	———	———	——	———	——	——

APPROX DEV LENGTH D THRU F	5.96
APPROX DEV LENGTH H THRU K	5.96
APPROX DEV LENGTH M THRU AA	14.18
APPROX DEV LENGTH AC THRU AK	14.37
APPROX DEV LENGTH AM THRU AP	2.50

INSPECTION DATA & COORDINATES					
POINT	X	Y	Z	WING ANGLE	BODY ANGLE
DEI	4.56	0	0	0° 0'	0° 0'
EFI	8.05	.88	0	0° 0'	30° 0'
HJI	12.43	3.40	0	0° 0'	30° 0'
JKI	14.93	5.98	0	0° 0'	60° 0'
MNI	16.72	9.09	0	0° 0'	60° 0'
NPI	17.14	10.54	0	0° 0'	83° 45'
PRI	17.34	12.33	-.43	-26° 57'	83° 45'
RSI	17.62	13.98	-.86	0° 0'	83° 45'
TUI	17.60	16.37	-.86	0° 0'	90° 0'
UVI	17.25	19.81	-.86	0° 0'	101° 53'
WAAI	16.65	22.36	-.86	0° 0'	120° 1'
ACADI	15.42	24.53	-.86	0° 0'	120° 1'
ADAEI	13.58	26.40	-.86	0° 0'	135° 0'
AFAGI	10.27	29.17	-.86	0° 0'	150° 0'
AGAHI	6.70	30.52	-.86	0° 0'	166° 0'
AJAKI	3.58	31.26	-.86	0° 0'	180° 0'
AMANI	1.32	31.26	-.86	0° 0'	180° 0'
ANAPI	-.14	30.97	-.86	0° 0'	195° 0'

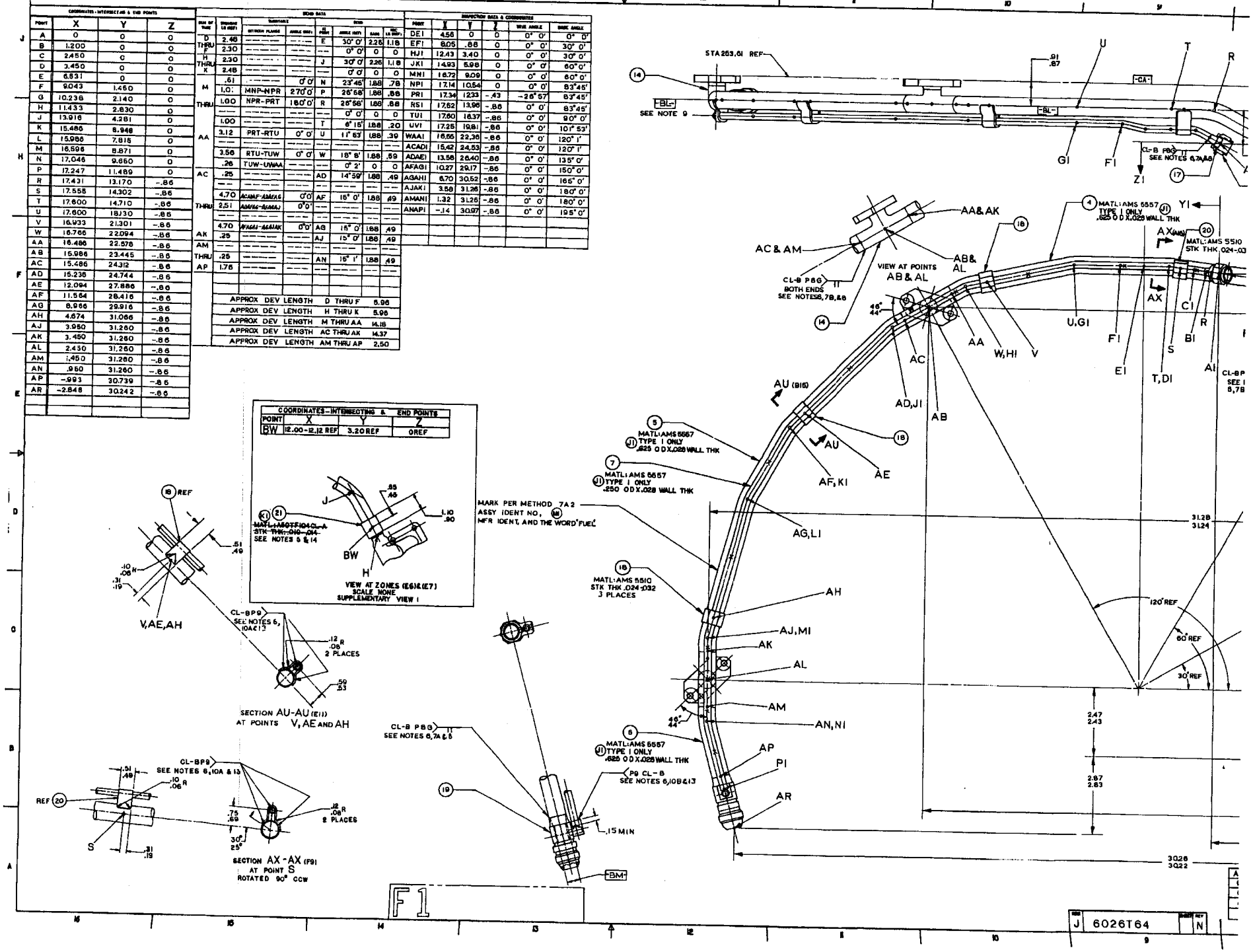

GE AIRCRAFT ENGINES
LYNN, MASS
CAGE 99207

ORIGINAL APPD DIST
ISSUE CEB A11
76-07-07

TITLE
MANIFOLD,MAIN FUEL A/B-RH

PARTS LIST
PL 6026T64

SEC SH RV
A 1 F

LC 1 SEE SEP LIST
3 SEL FIT-SEE DWG
5 SOURCE CONT DWG
7 REFERENCE INFO
2 SPEC CONT DWG
4 SEE CSTG OR FORG DWG
6 SEL FIT-SEE CONT DWG
8 CUST FURNISHED ITEM

RC 1 ITEM OR ASSY ADD
4 ZONE,SHT,OR DATE
7 ITEM NO CHG
A PARTIAL ITEM ADD
2 ITEM DELETED
5 IDENT NO CHG
8 GENERAL CHG
B PARTIAL ITEM DEL
3 QUANTITY CHG
6 NOMEN CHG
9 CAGE CHG
C PART QTY CHG

ITEM NO	DRAWING ZONE SH	IDENTIFICATION	NOMENCLATURE	L C	CAGE	G	SUFFIX NO AND QTY REQD 01	02	03	04	R C	R V
1	A08	6026T64G01	ASSY				X					
1	A08	6026T64G02	ASSY					X				
1	A08	6026T64G03	ASSY						X		1	B
1	A08	6026T64G04	ASSY							X	1	C
2	D06	6026T64P01	TUBE				1	1	1	1	1	D
3	E06	6026T64P02	TUBE				1	1	1	1		
4	H09	6026T64P03	TUBE				1	1	1	1		
5	E12	6026T64P04	TUBE				1	1	1	1		
6	B12	6026T64P05	TUBE				1	1	1	1		
7	D12	6026T64P06	TUBE				1	1	1	1		
8	C13		FLANGE,MNFLD-AB								2	F
8	H11		FLANGE,MNFLD-AB								2	F
9	H07		FLANGE,MAIN VAL								2	F
9	B06		FLANGE,MAIN VAL								2	F
10	B06	4100T18P02	TEE,CSTG/MCHRY				1	1	1	1	8	F
11	A04	3027T42P01	FLANGE				1	1				
11	A04	4064T29P01	FLANGE,AB						1	1		
12	B04	6026T64P08	TUBE				1	1	1	1		
13	H07	4100T20P02	TEE-CSTG/MCHRY				1	1	1	1	8	F
13	J06	4100T20P03	TEE-CSTG/MCHRY				1	1	1	1	8	F
14	F11	4100T19P02	TEE,CSTG/MCHRY				1	1	1	1	8	F
14	J12	4100T19P02	TEE,CSTG/MCHRY				1	1	1	1	8	F
15	B07	J1113P10B	COUPLING,TUBE		07482		1	1	1	1		
16	H09	AN818-4J	NUT,TUBE CPLG				1	1	1	1		
17	H09	J1159P04	FERRULE,TUBE		07482		1	1	1	1	5	E
18	H10	6026T64P11	CLIP				1	1	1	1		
18	E11	6026T64P11	CLIP				1	1	1	1		
18	D12	6026T64P11	CLIP				1	1	1	1		
19	B14	3039T36G01	COUPLING TUBE	1			1	1	1	1	5	A
20	H09	6026T64P12	CLIP				1	1	1	1		

REV	A	B	C	D	E	F
CID	CORRECT	306970	307594	819372	628009	633082
YMD	77-02-17	77-07-21	78-05-24	79-02-15	81-01-06	92-03-06

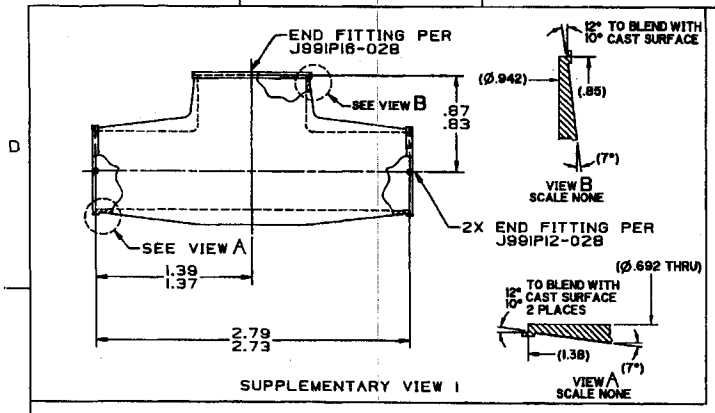

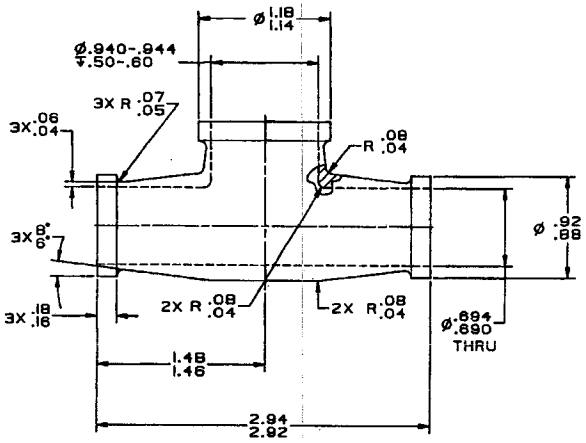

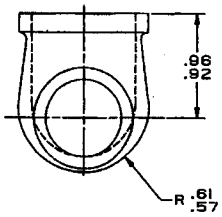

PART IDENTIFICATION NUMBER	APPLICABLE SUPPLEMENTARY VIEW	MAKE FROM
4100T18P01	—	—
4100T18P02	1	4100T18P01

4 FLUORESCENT PENETRANT INSPECT PER P3TF2 CL-A WITH THE FOLLOWING ACCEPTABILITY LIMITS:
- A) NO THRU INDICATIONS OR CRACKS ALLOWED
- B) ALL OTHER INDICATIONS LESS THAN .02 ARE ACCEPTABLE
- C) ALL INDICATIONS BETWEEN .02 AND .04 ARE ACCEPTABLE PROVIDED THEY ARE NO CLOSER THAN .12
- D) MICROSHRINKAGE PER PHOTO 8311253 CL-20

3 MARK PART IDENT NO. AND MFG IDENT ON TAG OR PACKAGE

2 UNLESS OTHERWISE SPECIFIED, MACHINED SURFACES TO BE 63√

1 MUST CONFORM TO:
- P1TF3 CL-A (INTERPRETATION OF DRAWING)
- P1TF9 CL-A (MACHINED FEATURES)
- P1TF11 CL-A (CAST & FORGED PARTS)
- P23TF3 (IDENTIFICATION MARKING) SEE NOTE 3

REVISIONS

ZONE	LTR	DESCRIPTION	DATE	APPROVED
	A	(1) NOTE 4D WAS... PHOTO 8211253 CL-20 DCID 663187	92-2 -6	R.J. Bauer H. Gulbran S. North
A6	B	(1) P02 ASV WAS 4100T18 P01 (2) MAKE FROM COLUMN ADDED DCID 663311	92-3 -23	[illegible] S. North
C6 D6	C	(1) VIEW A REVISED (2) VIEW B ADDED CID 633640	94 -12 -14	A.MAILLET G.GAUVAIN M.LIONETTO

THIRD ANGLE PROJECTION

UNLESS OTHERWISE SPECIFIED DIMENSIONS ARE IN INCHES

ALL SURFACES 125√

MATL: AMS 5362

RASTER FOR GE USE ONLY

SIMILAR TO

L/O

DR 4F2173

WR

DWG TYPE DETAIL

CONTRACT

SIGNATURES		12-10-0A
DRAWN	J.LOWENS/	90-04-11
CHECKED	T.MANNETTA/	90-06-06
STRESS	G.CHARRON/	90-08-18
MFG	M.SPEARS	90-08-23
MATL	B.MOKLE	90-08-31
ISSUED	D.PRESCOTT/	90-09-12
NO CHG		
HOT	R.LEE	90-6-18

GE Aircraft Engines — General Electric Company, Lynn MA., USA

TEE, MANIFOLD-A/B CASTING/MACHINING

SIZE D | CAGE CODE 99207 | DWG NO 4100T18

SCALE 2/1 | SHEET

PROTO 506-1

4100T18

NOOO19-98-C-0007 Distribution Statement Code: D Export Controlled

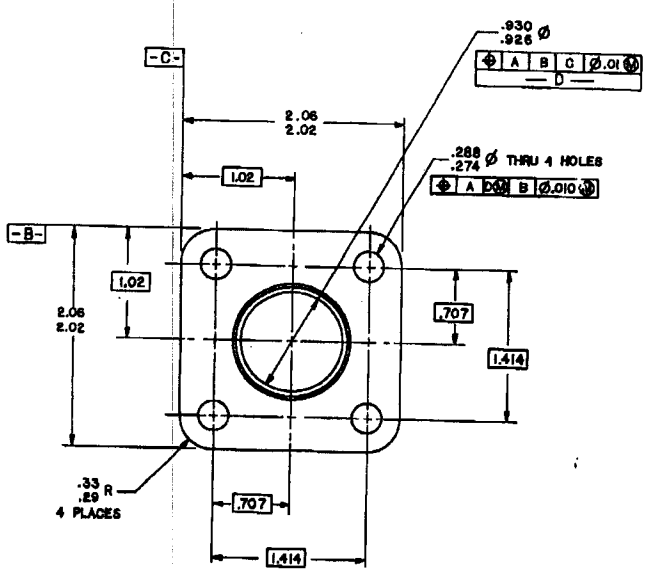

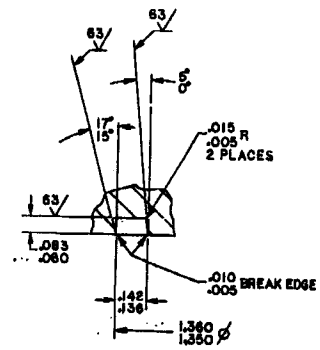

VIEW E (A7)
SCALE 4/1

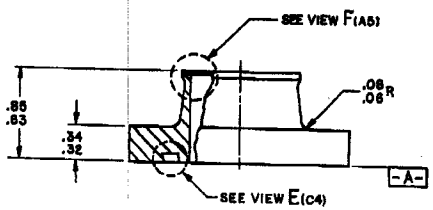

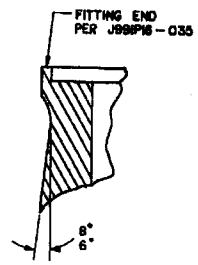

VIEW F (B6)
SCALE : 10/1

PART IDENTIFICATION NUMBER
4064T29P01

4 CLASS B MATERIAL RELEASE (SEE P1TF3)

3 FLUORESCENT PENETRANT INSP PER P3TF2 CL-B WITH THE FOLLOWING ACCEPTABILITY LIMITS:
- A) NO THRU INDICATIONS ALLOWED
- B) ALL OTHER INDICATIONS LESS THAN .02 ARE ACCEPTABLE
- C) ALL INDICATIONS, EXCEPT CRACKS, BETWEEN .02 AND .04 ARE ACCEPTABLE PROVIDED THEY ARE NOT CLOSER THAN .12

2 MARK PART IDENT NO AND MFR IDENT NO ON TAG OR PACKAGE

1 MUST CONFORM TO:
- P1TF3 CL-A (INTERPRETATION OF DRAWING)
- P3TF3 CL-A (MACHINED FEATURES)
- P23TF3 (IDENTIFICATION MARKING) SEE NOTE 2

REVISIONS				
ZONE	LTR	DESCRIPTION	DATE	APPROVED

DWG TYPE: DETAIL
CONTRACT

SIGNATURES		VR-NO-DA
DRAWN	T. L. Wa...	78-3-18
CHECKED	[illegible]	78-3-24
ENGRG	[illegible]	78-3-23
APR	G. CHENERY	78-3-22
DES	J. HUGHES	78-3-22
ENGRG	[illegible]	78-3-23

UNLESS OTHERWISE SPECIFIED: DIMENSIONS ARE IN INCHES
ALL SURFACES 125
MATL AMS 5645
FOR GE USE ONLY
SIMILAR TO 3027T42
I/D
DR 42-4F0570

GENERAL ELECTRIC
AIRCRAFT ENGINE GROUP, LYNN, MASSACHUSETTS, U.S.A.

FLANGE, MAIN FUEL — AFTERBURNER

SIZE	CODE IDENT NO	DWG NO
D	99207	4064T29

SCALE 2/1 WT (KG) SHEET

4064T29

NOOO19-98-C-0007 Distribution Statement Code: D Export Controlled

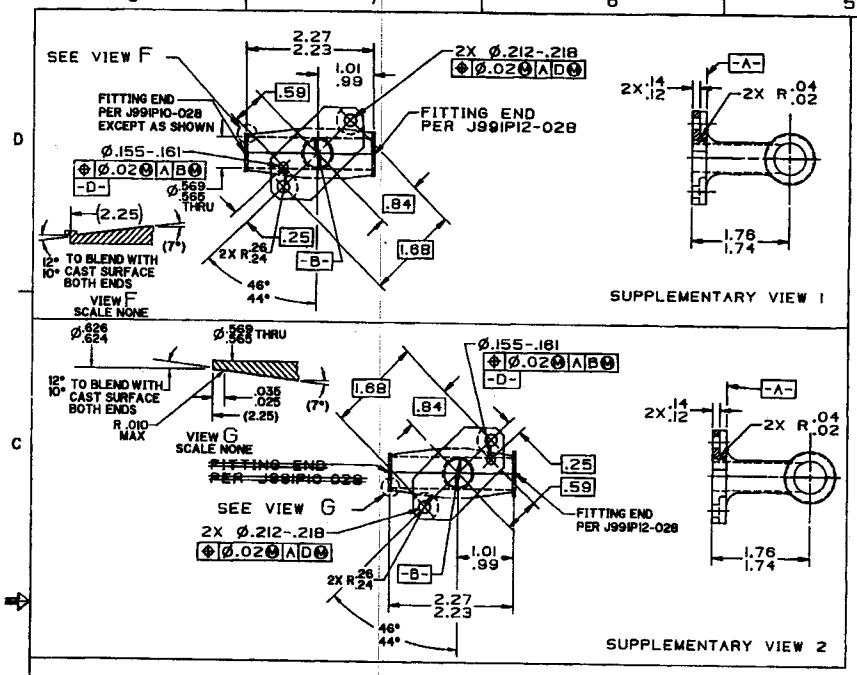

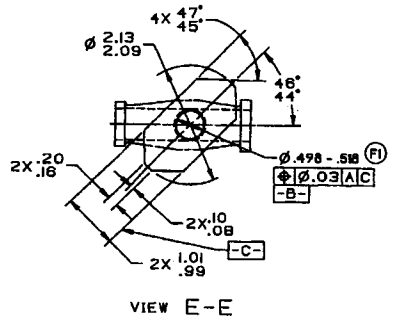

ZONE	LTR	REVISIONS DESCRIPTION	DATE	APPROVED
	A	(1) NOTE 4D WAS "... PHOTO 8211253 CL-20" DCID663187	92-2-6	K.J. Bartlett, H. Gunderson, S. Novelli
A7 B6 A6	B	(1) DIM ADDED (2) DIM ADDED (3) DIM ADDED DCID 663249	92-9-23	R.P. Bartlett, J. Chandler, S. Novelli
A8 B6	C	(1) WAS Ø.559-.574 (2) WAS Ø.683-.698 CID 633317	93-9 -24	R. Bartlett, W. Fleming, K. Brand, J. Chandler
	D	(1) GENL CHG ZONES D8,D7,C8 & C7 CID 633640	94 -12 -14	A.MAILLET G.GAUVAIN M.LIONETTO
C3	E	(1) NOTE 5 ADDED CID 634479	96 -10 -08	R. ROBERGE R. BUTLER M. VASQUEZ
D4	F	(1) WAS " Ø .493 - .507..." CID 634693	98 -01 -12	M.DEMANCHE T.MANNETA C.S SAMOYLENKO B.CAUNTER

5 MUST CONFORM TO P21TF6 CL-C (IN PROCESS WELDING OF CASTINGS) WITH THE FOLLOWING REQUIREMENTS:

A) WELD LIMITS:

1) AREA OF WELD 1 SQ IN MAX
2) 60% OF TOTAL SURFACE AREA
3) SEPARATION DISTANCE IS .10 IN

B) P&G OR P&P PROCESS PER P8TF3 CL-F

4 FLUORESCENT PENETRANT INSPECT PER P3TF2 CL-A WITH THE FOLLOWING ACCEPTABILITY LIMITS:

A) NO THRU INDICATIONS OR CRACKS ALLOWED
B) ALL OTHER INDICATIONS LESS THAN .02 ARE ACCEPTABLE
C) ALL INDICATIONS BETWEEN .02 AND .04 ARE ACCEPTABLE PROVIDED THEY ARE NO CLOSER THAN .12
D) MICROSHRINKAGE PER PHOTO 8311253 CL-20

3 MARK PART IDENT NO AND MFG IDENT ON TAG OR PACKAGE

2 UNLESS OTHERWISE SPECIFIED, MACHINED SURFACES TO BE 63 √

1 MUST CONFORM TO:

P1TF3	CL-A	(INTERPRETATION OF DRAWING)
P1TF9	CL-A	(MACHINED FEATURES)
P1TF11	CL-A	(CAST & FORGED PARTS)
P23TF3		(IDENTIFICATION MARKING) SEE NOTE 3

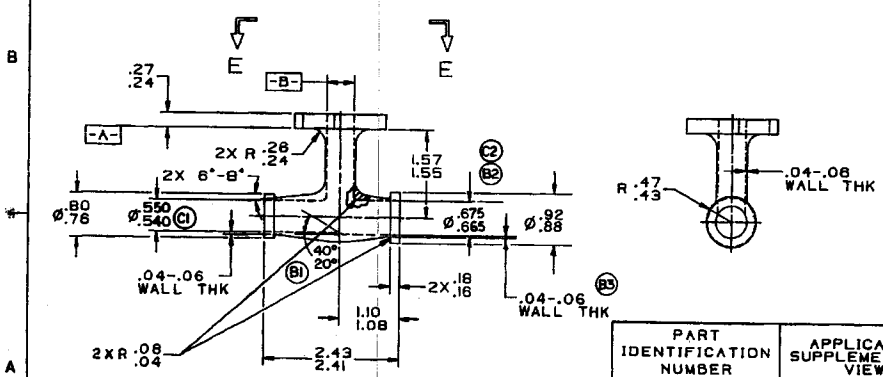

PART IDENTIFICATION NUMBER	APPLICABLE SUPPLEMENTARY VIEW	MAKE FROM
4100T20P01	—	—
4100T20P02	1	4100T20P01
4100T20P03	2	4100T20P01

THIRD ANGLE PROJECTION
UNLESS OTHERWISE SPECIFIED DIMENSIONS ARE IN INCHES
ALL SURFACES 125 √
MATL: AMS 5382
RASTER FOR GE USE ONLY
SIMILAR TO
L/O
DR L7 4F2173

DWG TYPE: DETAIL
CONTRACT

	SIGNATURES	YR-MO-DA
DRAWN	J.LOWENS/	80-04-23
CHECKED	T.MANNETTA/	82-06-05
ENGR	G.CHARRON/	80-07-31
APPR	C.BUSHNELL	80-07-31
MATL	S.NICKLE	80-08-05
ISSUED	D.PRESCOTT/	98-09-13
DR CHK		
MFG	S.LEE	80-07-31

GE Aircraft Engines — General Electric Company, Lynn MA., USA

TEE – CASTING/MACHINING

SIZE D | CAGE CODE 99207 | DWG NO 4100T20

SCALE 1/1 | SHEET

PRINTS TO 506-1

MOD 019-98-C-0007 Distribution Statement Code: D Export Controlled

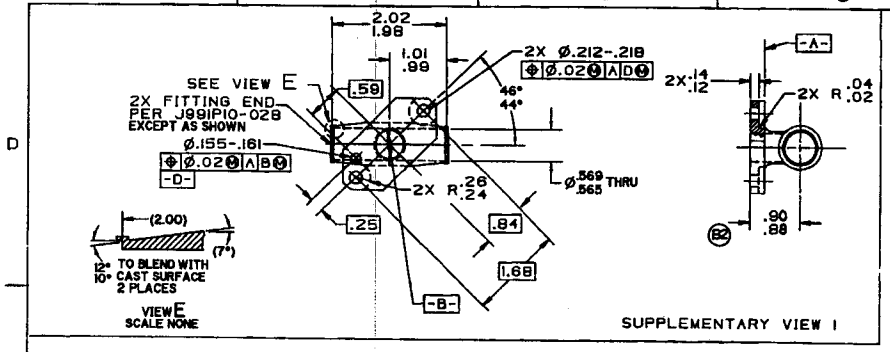

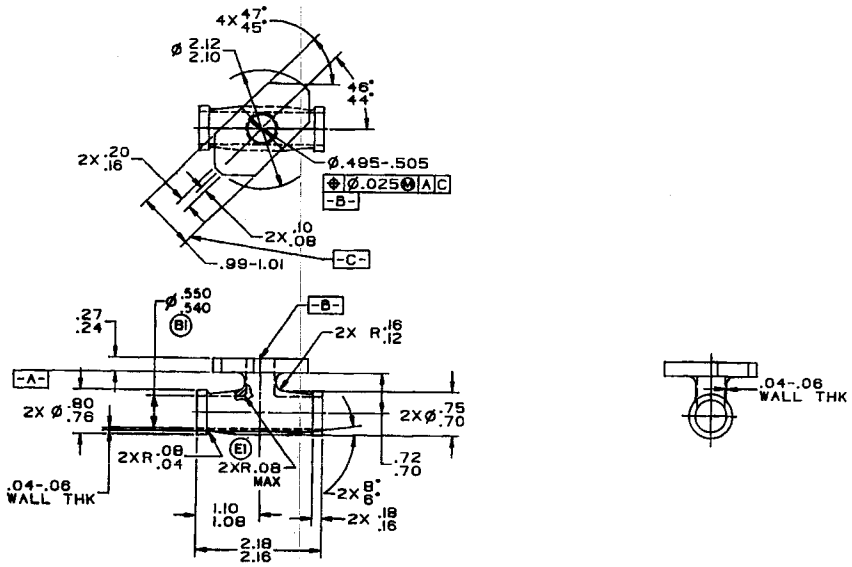

ZONE	LTR	REVISIONS DESCRIPTION	DATE	APPROVED
	A	(1) NOTE 4D WAS... PHOTO 8211253 CL-20 DC ID 663187	92-2 -6	
B7 D6	B	(1) WAS Ø.559-.574 (2) WAS Ø.87-.91 CID 633317	93-9 -24	
D8 D7	C	(1) VIEW E REVISED (2) 44°-46° ADDED (3) Ø.565-.569 THRU ADDED (4) CALLOUT WAS "2X FITTING END PER J991P10-028" CID 633640	94 -12 -14	A.MAILLET G.GAUVAIN M.LIONETTO
C3	D	(1) NOTE 5 ADDED CID 634479	96 -10 -08	R. ROBERGE R. BUTLER M. VASQUEZ
B7	E	(1) DIM WAS 2 X R .08 .04 CID 634665	97 -06 -19	J.MEERE R.BUTLER T.MANNETTA

5 MUST CONFORM TO P21TF6 CL-C (IN PROCESS WELDING OF CASTINGS) WITH THE FOLLOWING REQUIREMENTS:
- A) WELD LIMITS:
  - 1) AREA OF WELD 1 SQ IN MAX
  - 2) 60% OF TOTAL SURFACE AREA
  - 3) SEPARATION DISTANCE IS .10 IN
- B) P8G OR P8P PROCESS PER P8TF3 CL-F

4 FLUORESCENT PENETRANT INSPECT PER P3TF2 CL-A WITH THE FOLLOWING ACCEPTABILITY LIMITS:
- A) NO THRU INDICATIONS OR CRACKS ALLOWED
- B) ALL OTHER INDICATION LESS THAN .02 ARE ACCEPTABLE
- C) ALL INDICATIONS BETWEEN .02 AND .04 ARE ACCEPTABLE PROVIDED THEY ARE NO CLOSER THAN .12
- D) MICROSHRINKAGE PER PHOTO B311253 CL-20

3 MARK PART IDENT NO AND MFG IDENT ON TAG OR PACKAGE

2 UNLESS OTHERWISE SPECIFIED, MACHINED SURFACES TO BE 63√

1 MUST CONFORM TO:

P1TF3	CL-A	(INTERPRETATION OF DRAWING)
P1TF9	CL-A	(MACHINED FEATURES)
P1TF11	CL-A	(CAST & FORGED PARTS)
P23TF3		(IDENTIFICATION MARKING) SEE NOTE 3

PART IDENTIFICATION NUMBER	APPLICABLE SUPPLEMENTARY VIEW	MAKE FROM
4100T19P01	—	—
4100T19P02	1	4100T19P01

THIRD ANGLE PROJECTION
UNLESS OTHERWISE SPECIFIED DIMENSIONS ARE IN INCHES
ALL SURFACES 125√
MATL: AMS 5382
RASTER FOR DE USE ONLY
AUXILIAR TO
L/O
DS L7 4F2173

DWG TYPE: DETAIL
CONTRACT

SIGNATURES		YR-MO-DA
DRAWN	J.J.OWENS/	90-04-17
DESIGNED	T.MANNETTA/	90-06-31
CHECKED	G.CHAMRON/	90-05-04
APD	C.BUSHNELL	97-06-11
MAT'L	B.MICKLE	90-06-05
ISSUED	D.PRESCOTT/	97-09-12
DR SUP		
CONT SUPT	R.LEE	90-06-18

GE Aircraft Engines — General Electric Company, Lynn MA., USA

TEE - CASTING/MACHINING

SIZE D | CAGE CODE 99207 | DWG NO 4100T19

SCALE 1/1 | SHEET

REV D 4100T19 E

PRINTS 10 | SOS-1

Distribution Statement Code: D — Export Controlled

N00019-98-C-0007

AEBG _____ Standard Part

THIRD ANGLE PROJECTION

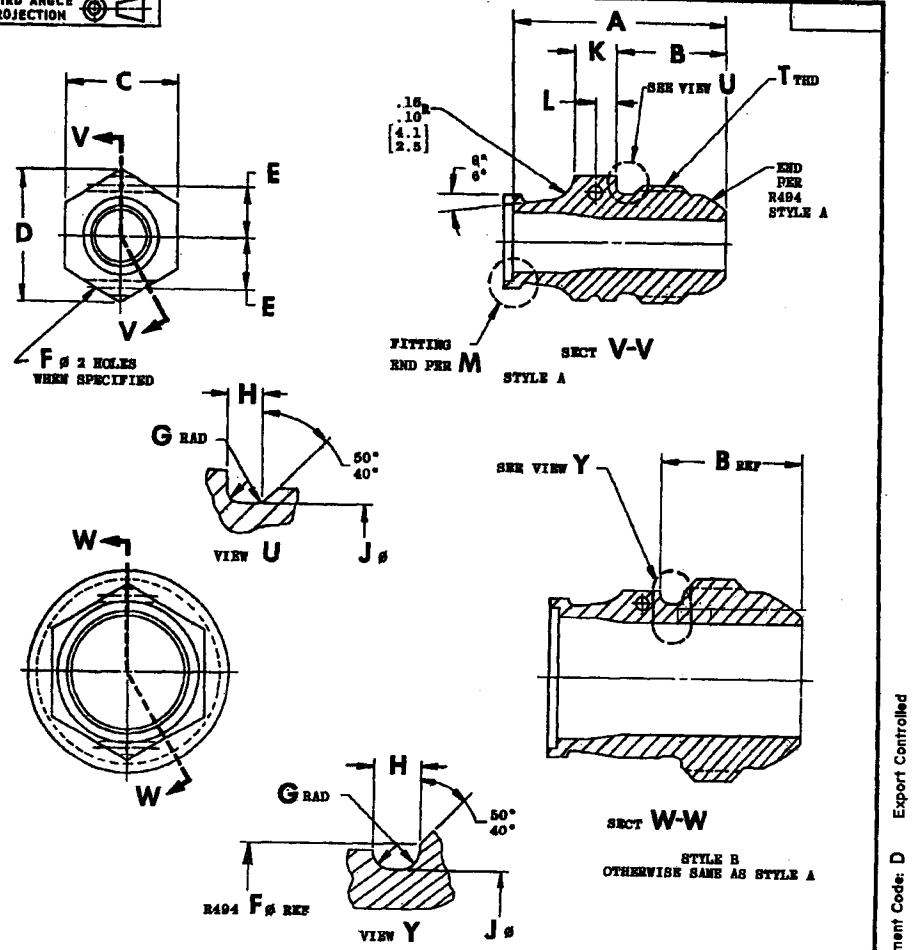

J1113

REVISED 98-02-04 CID 078497 FOR CHG, SEE SH 1,2 & 3 CHK (D)

REVISED 97-04-24 CID 078546 FOR CHG, SEE SH 3 CHK (C)

REVISED 95-10-17 CID 078245 FOR CHG SEE SH 3 CHK (B)

REVISED 86-4-9 CID 74978 FOR CHG SEE SH 1 (A)

ISSUED: JUNE 10, 1976

SD

W1

DRAWN: L. Murphy 4-29-76
ENGRG: [illegible] 6-8-76
MFG:
MATL: [illegible] 6-8-76

C/C

COUPLING, TUBE - WELDING, 321 CRES, .028 WALL

RASTER

CODE IDENT NO. 07482

J1113

SHEET 1 OF 3

EGW 6-8-76
WAM 6-9-76

GENERAL ELECTRIC

CINCINNATI, OHIO 45215

N00019-98-C-0007 Distribution Statement Code: D Export Controlled

TABLE 1 - INCHES

BASIC PART NO (a)	DASH NO	T THD MIL-S-8879	STYLE	A ±.01	B ±.03	C	D MIN	E	F
J1113P03	-3	.375-24 UNJF-3A	A	.88	.48	.336-.345	.374	.132-.142	.045-.050
J1113P04	-4	.4375-20 UNJF-3A	A	.93	.53	.430-.439	.482	.176-.186	.045-.050
J1113P05	-5	.500-20 UNJF-3A	A	.95	.55	.492-.502	.552	.205-.215	.057-.062
J1113P06	-6	.5625-18 UNJF-3A	A	1.05	.55	.553-.564	.622	.240-.250	.065-.075
J1113P08	-8	.750-16 UNJF-3A	B	1.11	.61	.616-.627	.694	.286-.296	.065-.075
J1113P10	-10	.875-14 UNJF-3A	B	1.20	.70	.741-.752	.836	.340-.350	.065-.075
J1113P12	-12	1.0625-12 UNJ-3A	B	1.28	.78	.804-.814	.908	.396-.406	.065-.075
J1113P16	-16	1.3125-12 UNJ-3A	B	1.34	.84	1.052-1.064	1.191	.506-.528	.065-.075

BASIC PART NO (a)	G	H ±.01	J	K ±.01	L ±.01	M	APPROX WEIGHT LB
J1113P03	.02-.05	.07	.306-.311	.10	.06	J991P03-028	.015
J1113P04	.02-.05	.08	.356-.362	.10	.05	J991P04-028	.021
J1113P05	.02-.05	.08	.419-.425	.10	.05	J991P05-028	.026
J1113P06	.02-.05	.09	.474-.480	.20	.10	J991P06-028	.036
J1113P08	.03-.07	.10	.616-.627	.20	.10	J991P08-028	.054
J1113P10	.03-.07	.12	.741-.752	.20	.10	J991P10-028	.076
J1113P12	.03-.07	.13	.804-.814	.20	.10	J991P12-028	.094
J1113P16	.03-.07	.13	1.052-1.064	.20	.10	J991P16-028	.131

(a) DO NOT USE UNASSIGNED PART NUMBERS

TABLE 1 - MILLIMETERS

BASIC PART NO (a)	A ±0.25	B ±0.5	C	D MIN	E	F
J1113P03	22.35	12.2	8.53- 8.76	9.50	3.35- 3.61	1.14-1.27
J1113P04	23.62	13.5	10.92-11.15	12.24	4.47- 4.72	1.14-1.27
J1113P05	24.13	14.0	12.50-12.75	14.02	5.21- 5.46	1.45-1.57
J1113P06	26.67	14.0	14.05-14.33	15.80	6.10- 6.35	1.65-1.91
J1113P08	28.19	15.5	15.65-15.93	17.63	7.26- 7.52	1.65-1.91
J1113P10	30.48	17.8	18.82-19.10	21.23	8.64- 8.89	1.65-1.91
J1113P12	32.51	19.8	20.42-20.68	23.06	10.06-10.31	1.65-1.91
J1113P16	34.04	21.3	26.72-27.03	30.25	12.90-13.41	1.65-1.91

BASIC PART NO (a)	G	H ±0.25	J	K ±0.25	L ±0.25	APPROX WEIGHT kg
J1113P03	0.51-1.27	1.78	7.77- 7.90	2.54	1.27	0.01
J1113P04	0.51-1.27	2.03	9.04- 9119	2.54	1.27	0.01
J1113P05	0.51-1.27	2.03	10.64-10.80	2.54	1.27	0.01
J1113P06	0.51-1.27	2.29	12.04-12.19	5.08	2.54	0.02
J1113P08	0.76-1.78	2.54	15.65-15.93	5.08	2.54	0.02
J1113P10	0.76-1.78	3.05	18.82-19.10	5.08	2.54	0.03
J1113P12	0.76-1.78	3.30	20.42-20.68	5.08	2.54	0.04
J1113P16	0.76-1.78	3.30	26.72-27.03	5.08	2.54	0.06

(a) DO NOT USE UNASSIGNED PART NUMBERS

J1113

SD ISSUED: JUNE 10, 1976 (A) FOR CHG SEE SH 1 (B) FOR CHG SEE SH 3 CHK (C) FOR CHG SEE SH 3 CHK (D) FOR CHG SEE SH 1 & 3 CHK

DRAWN: [illegible] 4-29-76
ENGRG: [illegible] 6-8-76
MFG:
MATL: [illegible] 6-8-76
BEW 6-9-76
WAM 6-9-76

COUPLING, TUBE - WELDING, 321 CRES, .028 WALL

CODE IDENT NO. 07482

J1113

SHEET 2

GENERAL ELECTRIC

CINCINNATI, OHIO 45215

AEBG Standard Part

J1113

1 MUST CONFORM TO:
P1TF3 CL-A (INTERPRETATION OF DWG)
AS 478 (MARKING) SEE NOTE 3
P1TF9 CL-A (MACHINED FEATURES)
M50TF3 CL-A (PROTECTIVE CLOSURES)
AMS 5645 (321 CRES)

2 UNLESS OTHERWISE SPECIFIED, SURFACES TO BE [3.2] 125

3 MARKING
A) FOR PARTS P03, P04 & P05 MARK PER CLASS D THE FIRST FIVE CHARACTERS OF PART IDENT NO (J1113) ON UNDRILLED HEX FLAT. MARK PER METHOD 35D COMPLETE PART IDENT NO AND MFR IDENT
B) FOR ALL OTHER PARTS, MARK PER CLASS D COMPLETE PART IDENT NO AND MFR IDENT ON HEX FLAT

4 UNLESS OTHERWISE SPECIFIED, DIMENSIONS ARE IN INCHES; [X.XX] ARE MILLIMETERS; XX ARE MICROINCHES; [X.X] ARE MICROMETERS. ø - DIAMETER

EXAMPLE OF COMPLETE PART IDENT NO FOR -12 SIZE WITH SAFETY WIRE HOLES

J1113P12A

BASIC PART NO FOR -12 SIZE

DENOTES FEATURE
LETTER (A) FOR SAFETY WIRE HOLES
LETTER (B) FOR NO SAFETY WIRE HOLES

SD

ISSUED: JUNE 10, 1976 (A) FOR CHG SEE SH 1 (B) FOR CHG SEE SH 3 CHK (C) FOR CHG SEE SH 3 CHK (D) FOR CHG, SEE SH 1,2 & 3 CHK

DRAWN: L. Murphy 4-30-76
ENGRG: [signature] 6-8-76
MFG:
MATL: [signature] 6-8-76
EEW 6-9-76
WAM 6-9-76

C/C

COUPLING, TUBE - WELDING, 321 CRES, .028 WALL

CODE IDENT NO. 07482

J1113

SHEET 3

GENERAL ELECTRIC

CINCINNATI, OHIO 45215

Unclassified J1113 0003 0001 D D 07482 UNCONTROLLED DOCUMENT WHEN PRINTED - ZED532L 18-JAN-2003

AIRCRAFT ENGINE GROUP — Standard Part

THIRD ANGLE PROJECTION

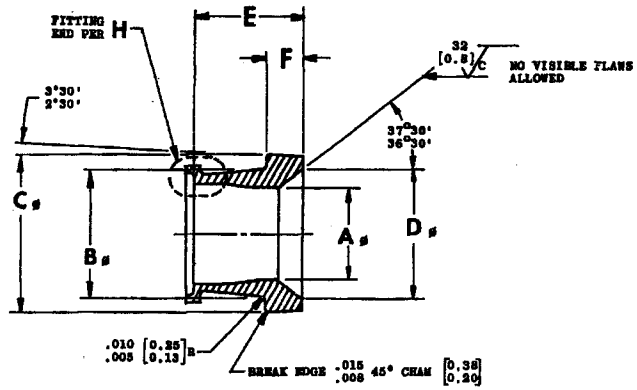

TABLE 1-INCHES

PART IDENT NO (a)	DASH NO	A ±.005	B	C	D	E ±.01	F ±.01
J1159P03	-3	.109	.231-.234	.326-.329	.245-.250	.44	.20
J1159P04	-4	.172	.294-.297	.380-.383	.295-.300	.44	.17
J1159P05	-5	.233	.363-.366	.442-.445	.355-.360	.44	.21
J1159P06	-6	.297	.429-.432	.499-.502	.435-.440	.48	.25
J1159P08	-8	.391	.559-.562	.679-.682	.570-.575	.55	.30
J1159P10	-10	.500	.687-.690	.794-.797	.680-.685	.59	.31
J1159P12	-12	.625	.823-.826	.969-.972	.850-.855	.60	.33
J1159P16	-16	.875	1.078-1.081	1.219-1.222	1.098-1.108	.64	.34

PART IDENT NO (a)	H	APPROX WEIGHT LB
J1159P03	J991P03-028	.006
J1159P04	J991P04-028	.006
J1159P05	J991P05-028	.009
J1159P06	J991P06-028	.011
J1159P08	J991P08-028	.024
J1159P10	J991P10-028	.031
J1159P12	J991P12-028	.045
J1159P16	J991P16-028	.063

(a) DO NOT USE UNASSIGNED PART NUMBERS

J1159

SD ISSUED: 1979, July 11 (A) REVISED 90-06-15 CID 076751 FOR CHG, SEE SH 1 & 2 CHK (B) REVISED 97-04-11 CID 078544 FOR CHG, SEE SH 1 & 2 CHK (C) REVISED 98-02-04 CID 078697 FOR CHG, SEE SH 1 & 2 CHK

N00019-98-C-0007 Distribution Statement Code: D Export Controlled

W1

DRAWN: R. KABITSCH
ENGRG: J. TOEPFERT
MFG: V. SEIBERT
MATL: K. VANDER LAAN

FERRULE, TUBE COUPLING - WELDING, 321 CRES, .028 WALL

RASTER
FSCM NO 07482
J1159
SHEET 1 OF 2

GENERAL ELECTRIC
CINCINNATI, OHIO 45215

J1159

TABLE 1 - MILLIMETERS

PART IDENT NO (a)	A ±0.13	B	C	D	E ±0.25	F ±0.25	APPROX WEIGHT kg
J1159P03	2.77	5.867- 6.944	8.280- 8.357	6.22- 6.35	11.18	5.08	.003
J1159P04	4.37	7.468- 7.544	9.652- 9.728	7.49- 7.62	11.18	4.32	.003
J1159P05	5.92	9.220- 9.296	11.227-11.303	9.02- 9.14	11.18	5.33	.004
J1159P06	7.54	10.897-10.973	12.675-12.751	11.05-11.18	12.19	6.35	.005
J1159P08	9.93	14.199-14.275	17.247-17.323	14.48-14.61	13.97	7.62	.011
J1159P10	12.70	17.450-17.526	20.168-20.244	17.27-17.40	14.97	7.87	.014
J1159P12	15.88	20.904-24.689	24.613-24.689	21.59-21.72	15.24	8.38	.020
J1159P16	22.23	27.381-27.457	30.963-31.039	27.89-28.14	16.26	8.64	.029

(a) DO NOT USE UNASSIGNED PART NUMBERS

1 MUST CONFORM TO:
P1TF3 CL-A (INTERPRETATION OF DWG)
AS 478 (MARKING) SEE NOTE 3
P1TF9 CL-A (MACHINED FEATURES)
AMS 5645 (321 CRES)

2 UNLESS OTHERWISE SPECIFIED, ALL SURFACES TO BE 125 [3.2]

3 MARK COMPLETE PART IDENT NO AND MFR IDENT ON TAG OR PACKAGE

4 UNLESS OTHERWISE SPECIFIED, DIMENSIONS ARE IN INCHES; [X.XX] ARE MILLIMETERS; [X.X] ARE MICROMETERS

5 TO BE USED WITH AN818 NUT (REF)

SD

ISSUED: 1979, July 11 (A) FOR CHG. SEE SH 1 & 2 (B) FOR CHG. SEE SH 2 CHK (C) FOR CHG. SEE SH 1 & 2 CHK

DRAWN: R.KABITSCH 79-05-17
ENGRG: J.TOEPFERT 79-07-09
MFG: V. SNIBERT 79-06-21
MATL: K.VANDER LAAN 79-06-21

c/k

FERRULE, TUBE COUPLING - WELDING, 321 CRES, .028 WALL

FSCM NO 07482

J1159

SHEET 2

SE MILLER SE 79-07-10 RYH

GENERAL ELECTRIC

CINCINNATI, OHIO 45215

Unclassified J1159 0002 0001 C C 07482 UNCONTROLLED DOCUMENT WHEN PRINTED - ZED532L 18-JAN-2003

SIZE		REV
C	3039T36	

REVISIONS

ZONE	LTR	DESCRIPTION	DATE	APPROVED

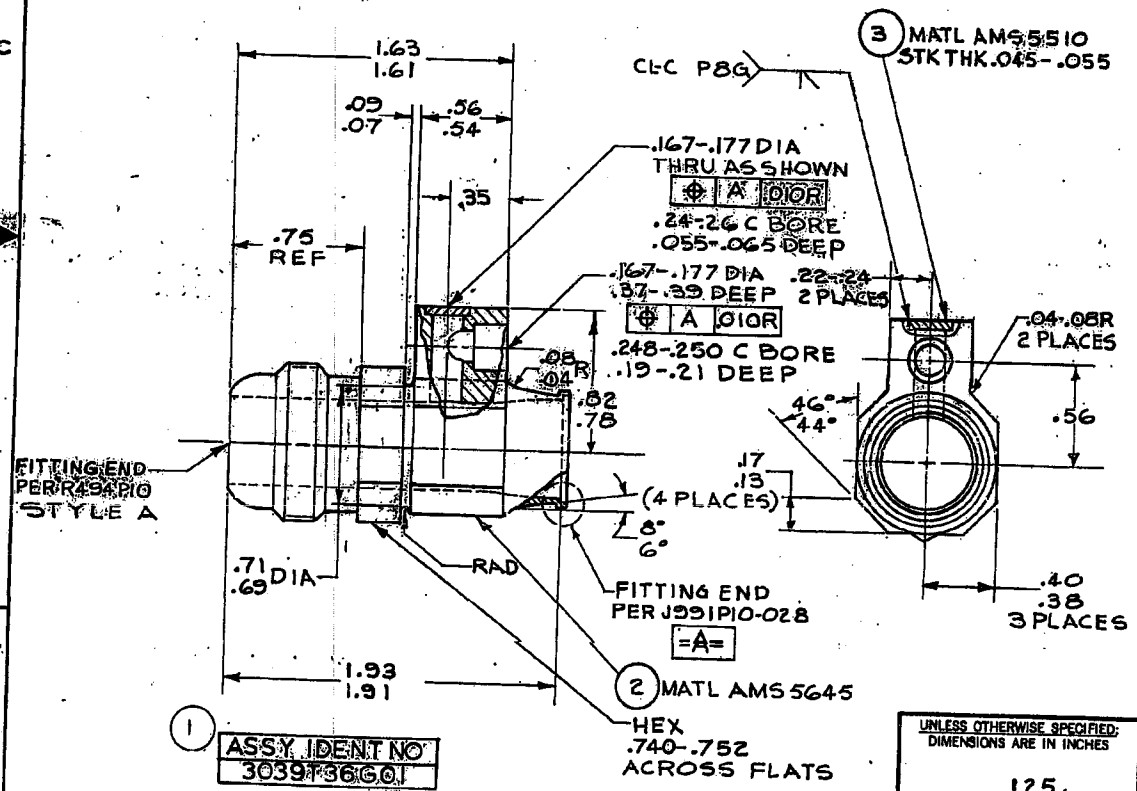

6 CLASS B MATERIAL RELEASE (SEE P1TF3)

5 P8G FILLER MATERIAL: AMS 5680

4 MARK ASSY IDENT NO & MFR IDENT ON TAG OR PACKAGE

3 FLUORESCENT PENETRANT INSP PER P3TF2 CL-D WITH THE FOLLOWING ACCEPTABILITY LIMITS:

A) PARENT MATERIAL
   1) ALL INDICATIONS .02 OR LESS ARE ACCEPTABLE
   2) ALL INDICATIONS, EXCEPT CRACKS, BETWEEN .02 & .04 ARE ACCEPTABLE IF NOT CLOSER THAN .50 INCHES

B) WELD JOINT
   1) ALL INDICATIONS .03 OR LESS ARE ACCEPTABLE
   2) ALL INDICATIONS, EXCEPT CRACKS, BETWEEN .03 & .06 ARE ACCEPTABLE PROVIDED THEY ARE NOT CLOSER THAN .25

2 PRIOR TO FLUORESCENT PENETRANT INSP HYD PRESSURE TEST PER AMS 2615. NO LEAKS ALLOWED WHEN TESTED AT 1400 PSIG FOR NOT LESS THAN ONE MINUTE

1 MUST CONFORM TO:

P1TF3	CL-A (INTERPRETATION OF DRAWING)
P1TF9	CL-A (MACHINED FEATURES)
P8TF3	(GAS SHIELDED ARC WELDING)
P1TF11	CL-A (CAST & FORGED PARTS)
P23TF3	(IDENTIFICATION MARKING) SEE NOTE 4
P1TF10	CL-A (SHEET METAL PARTS)
M50TF3	CL-A (PROTECTIVE CLOSURES)

N00019-76-C-0261

UNLESS OTHERWISE SPECIFIED: DIMENSIONS ARE IN INCHES

ALL SURFACES 125 ✓

MATL AS NOTED

FOR G.E. USE ONLY
SIMILAR TO J382
L/O 17A128-931
DR 42-69890

DWG TYPE DETAIL ASSY

SEE SEPARATE PARTS LIST

SIGNATURES	MO-DA-YR
DRAWN E. J. Maher	5/14/76
CHECKED [illegible]	6-7-76
ENGRG C/C R. L. Lovegrove	6-7-76
MFG R G [illegible]	6/3/76
MATL K OHARA	6/4/76
ISSUED C. C. Bauchman	6-9-76

GENERAL ELECTRIC
AIRCRAFT ENGINE GROUP, LYNN, MASSACHUSETTS, U.S.A.

COUPLING, TUBE — AB FUEL MANIFOLD

SIZE	CODE IDENT NO.	DWG NO.
C	99207	3039T36

SCALE 2/1 WT CALC ACTUAL SHEET

Unclassified 3039T36 0001 0001 99207 UNCONTROLLED DO[redacted]32L 18-JAN-2003

DV-102 (12/76)

GENERAL ELECTRIC
AIRCRAFT ENGINE GROUP
LYNN, MASS

CODE IDENT NO.	ORIGINAL ISSUE YR	MO	DAY	APPD	DIST CODE	TITLE
99207	76	06	09	CEB	A11 HOK	COUPLING,TUBE-AB FUEL MANIFOLD PARTS LIST CONTRACT NO N00019-76-C-0261 PL 3039T36

SEC | SHEET 1 | REV -

LIST CODES
1 SEE SEPARATE LIST
2 VENDOR ITEM - SEE SPEC CONTROL DWG
3 SELECTIVE FIT ITEM - SEE DWG
4 SEE DWG FOR CASTING OR FORGING DWG
5 VENDOR ITEM - SEE SOURCE CONTROL DWG
6 SELECTIVE FIT ITEM - SEE CONTROL DWG
7 REFERENCE INFORMATION
8 CUSTOMER FURNISHED ITEM

REVISION CODES
1 ITEM OR ASSY ADDED
2 ITEM DELETED
3 QUANTITY CHG
4 ZONE, SHEET OR DATE CHG
5 IDENT NO. CHG
6 NOMENCLATURE CHG
7 ITEM NO. CHG
8 GENERAL CHG
9 CODE IDENT CHG
A) PARTIAL ITEM ADDED
B) PARTIAL ITEM DELETED
C) PARTIAL QTY CHG

LINE NO.	ITEM NO.	DWG ZONE	DWG SHEET NO.	IDENTIFICATION	NOMENCLATURE	LIST CODE	CODE IDENT	G	SUFFIX NO AND QTY REQD 01	REV CODE	REV
1	1	A04		3039T36G01	ASSY				X		
2	2	A03		3039T36P01	COUPLING BODY				1		
3	3	C03		3039T36P02	PLUG				1		
				FINAL SHEET							

REV	CID NO.	YR	MO	DAY	REV	CID NO.	YR	MO	DAY	REV	CID NO.	YR	MO	DAY	REV	CID NO.	YR	MO	DAY	REV	CID NO.	YR	MO	DAY
			REVISED					REVISED					REVISED					REVISED					REVISED	